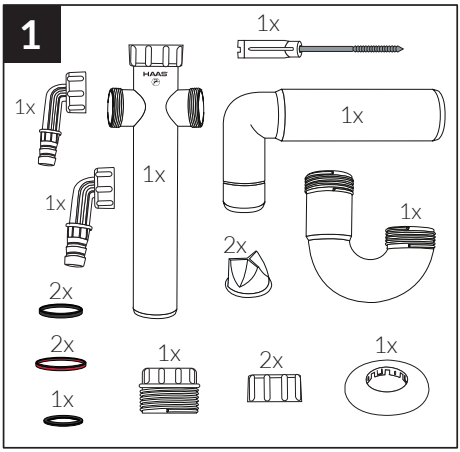

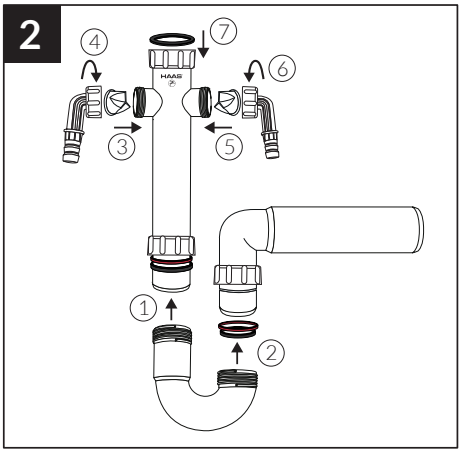

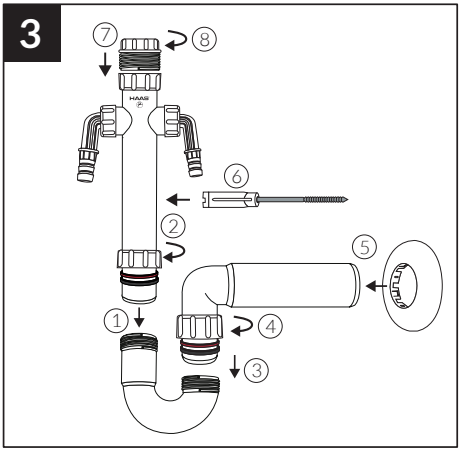

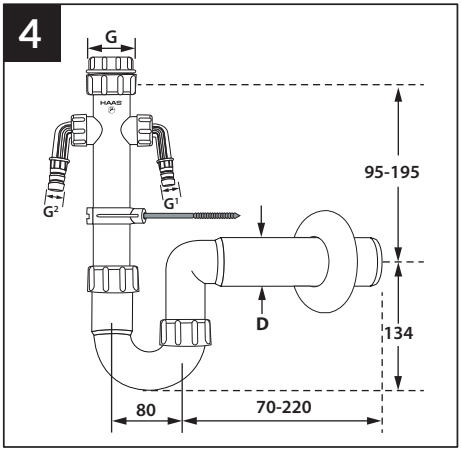

G = 1 ½"
G¹ = ⅜"
G² = ½"

760233